Switches

Commercial & Industrial Grade

ORDERING GUIDE

Commercial & Industrial Grade Switch Overview

PROBLEM SOLVING SOLUTIONS

Look for the GREEN icons shown below to assist you in browsing for the ideal switch.

PILOT LIGHT & ILLUMINATED

Featuring a light in the toggle or rocker, these switches illuminate to alert you from afar if your device is ON or OFF.

TAMPER-RESISTANT & KEY LOCKING

Switches designed to only be operated by authorized users.

ANTIMICROBIAL TREATED DEVICES

Made durable in order to withstand harsh chemical cleaning products, stringent washings, and UV lights with minimal wear and tear while inhibiting bacterial growth.

LEV-LOK MODULAR WIRING DEVICES

Features a simple twist-and-lock wiring module that allows for 3X faster installations and 5X faster swap outs than traditional wiring.

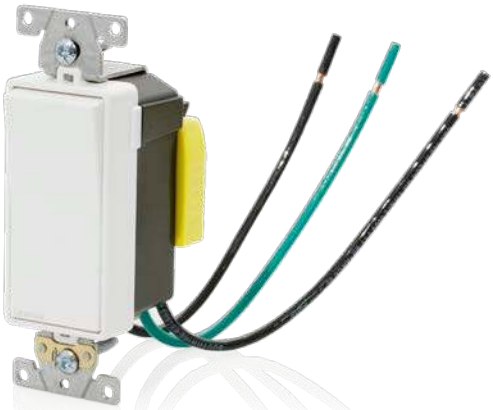

LEADED

Pre-attached leads save you time by simplifying installation and wiring.

MOMENTARY

Momentary switches are actuated when pressed, like a gym door or doorbell.

MAINTAINED

Maintained switches change position when actuated, and remain in that position until actuated again, like an ON/OFF button.

CANADIAN

A "Canadian" switch is CSA Listed only, Non-Grounding, rated 347 VAC, and has a strap for a 3.531 inch box mount.

FED SPEC

FED SPEC W-S-896

Leviton uses several Nationally Recognized Testing Labs (NRTLs) for certification of switches. UL and CSA are two of these NRTLs. When you see the UL, CSA, or cULus symbols, you can have the confidence that the devices adhere to strict scientific safety, quality or security standards.

In addition to complying with UL general use requirements, when you see the Fed Spec marking you are assured that the switch has been investigated for compliance with US Federal Specification W-S-896 for the purpose of more durability and service life.

Commercial & Industrial Grade

Switches

SELECTION GUIDE

TABLE OF CONTENTS

Overview 2

Switches 4

- Toggle Switches 5
- Decora Plus™ Switches 11
- Lev-lok® Switches 13
- Antimicrobial Treated Switches 16

Specialty Switches 18

- Tamper-Resistant 19
- Key Locking 19
- Momentary 19
- Maintained 20
- Hospital Call 20
- Low Voltage 21

Select Wallplates 22

Wiring Diagrams 23

Switches Summary

COMMON CATEGORIES

COMMERCIAL SPECIFICATION GRADE

The perfect balance between performance and value. Commercial grade switches feature a galvanized steel strap, are available in Decora style, and go up to 20 Amp.

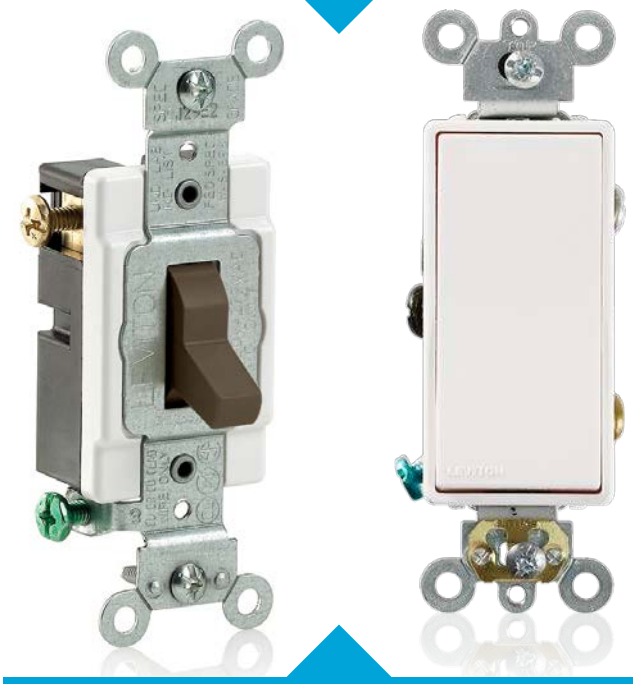

INDUSTRIAL SPECIFICATION GRADE

The ideal solution for demanding applications requiring robust construction and exceptional electrical performance. Industrial grade switches feature a heavy-duty thicker gauge galvanized steel strap for longer service life, and go up to 30 Amp.

KEY TERMINOLOGY

Wiring diagrams for the below switch types appear on page 23.

SINGLE POLE

Controls light(s)/load(s) from one location

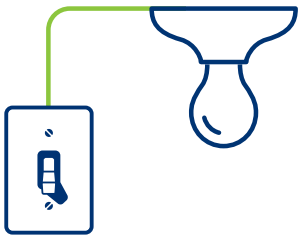

DOUBLE POLE

Controls small motor loads

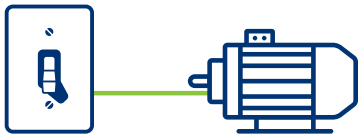

3-WAY

Controls light(s)/load(s) from two locations

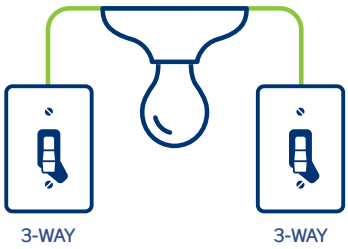

4-WAY

Controls light(s) from three locations

One 4-way switch and two 3-way switches must be used in a 4-way application

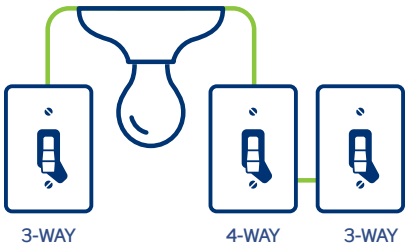

COMMERCIAL SPECIFICATION GRADE

120/277 V AC

	Features		Color	15 Amp	20 Amp
STANDARD TOGGLE	**Single Pole** • Side Wire • Fed Spec Rated	FED SPEC	White	CS115-2W	CS120-2W
			Ivory	CS115-2I	CS120-2I
			Lt Almond	CS115-2T	CS120-2T
			Brown	CS115-2	CS120-2
			Gray	CS115-2GY	CS120-2GY
			Black	CS115-2E	CS120-2E
	Double Pole • Side Wire • Fed Spec Rated	FED SPEC	White	CS215-2W	CS220-2W
			Ivory	CS215-2I	CS220-2I
			Lt Almond	—	CS220-2T
			Brown	CS215-2	CS220-2
			Gray	CS215-2GY	CS220-2GY
			Black	—	CS220-2E
	3-Way • Side Wire • Fed Spec Rated	FED SPEC	White	CS315-2W	CS320-2W
			Ivory	CS315-2I	CS320-2I
			Lt Almond	CS315-2T	CS320-2T
			Brown	CS315-2	CS320-2
			Gray	CS315-2GY	CS320-2GY
			Black	—	CS320-2E
	4-Way • Side Wire • Fed Spec Rated	FED SPEC	White	CS415-2W	CS420-2W
			Ivory	CS415-2I	CS420-2I
			Lt Almond	CS415-2T	CS420-2T
			Brown	CS415-2	CS420-2
			Gray	CS415-2GY	CS420-2GY
			Black	—	CS420-2E
	Single Pole • Back and Side Wire • Fed Spec Rated	FED SPEC	White	CSB1-15W	CSB1-20W
			Ivory	CSB1-15I	CSB1-20I
			Lt Almond	CSB1-15T	CSB1-20T
			Brown	CSB1-15	CSB1-20
			Gray	CSB1-15G	CSB1-20G
	Double Pole • Back and Side Wire • Fed Spec Rated	FED SPEC	White	CSB2-15W	CSB2-20W
			Ivory	CSB2-15I	CSB2-20I
			Lt Almond	CSB2-15T	CSB2-20T
			Brown	CSB2-15	CSB2-20
			Gray	—	CSB2-20G
	3-Way • Back and Side Wire • Fed Spec Rated	FED SPEC	White	CSB3-15W	CSB3-20W
			Ivory	CSB3-15I	CSB3-20I
			Lt Almond	CSB3-15T	CSB3-20T
			Brown	CSB3-15	CSB3-20
			Gray	—	CSB3-20G
	4-Way • Back and Side Wire • Fed Spec Rated	FED SPEC	White	CSB4-15W	CSB4-20W
			Ivory	CSB4-15I	CSB4-20I
			Lt Almond	CSB4-15T	CSB4-20T
			Brown	CSB4-15	CSB4-20
			Gray	—	CSB4-20G

CS120-2GY

CS320-2I

CSB4-20W

Toggle Switches

LEVITON

COMMERCIAL SPECIFICATION GRADE

120/277 V AC

	Features		Color	15 Amp	20 Amp
FRAMED TOGGLE	**Single Pole** • Framed Toggle • Side Wire • Fed Spec Rated	FED SPEC	White	54501-2W	54521-2W
			Ivory	54501-2I	54521-2I
			Brown	54501-2	54521-2
			Gray	54501-2GY	54521-2GY
	Double Pole • Framed Toggle • Side Wire • Fed Spec Rated	FED SPEC	White	54502-2W	54522-2W
			Ivory	54502-2I	54522-2I
			Brown	54502-2	54522-2
	3-Way • Framed Toggle • Side Wire • Fed Spec Rated	FED SPEC	White	54503-2W	54523-2W
			Ivory	54503-2I	54523-2I
			Brown	54503-2	54523-2
			Gray	54503-2GY	54523-2GY
	4-Way • Framed Toggle • Side Wire • Fed Spec Rated	FED SPEC	White	54504-2W	54524-2W
			Ivory	54504-2I	54524-2I
			Lt Almond	54504-2T	—
			Brown	54504-2	54524-2
			Gray	54504-2GY	54524-2GY
	Single Pole • Framed Toggle • Side Wire • Non-Grounding • Fed Spec Rated	FED SPEC	White	1101-CW	—
			Ivory	1101-CI	—
			Brown	1101-CB	—
			Gray	1101-CG	—
			Black	1101-CE	—
	Double Pole • Framed Toggle • Side Wire • Non-Grounding • Fed Spec Rated	FED SPEC	White	1102-CW	—
			Ivory	1102-CI	—
			Brown	1102-CB	—
	3-Way • Framed Toggle • Side Wire • Non-Grounding • Fed Spec Rated	FED SPEC	White	1103-CW	—
			Ivory	1103-CI	—
			Brown	1103-CB	—
	4-Way • Framed Toggle • Side Wire • Non-Grounding • Fed Spec Rated	FED SPEC	White	1104-CW	—
			Ivory	1104-CI	—
			Brown	1104-CB	—
			Black	1104-CE	—

120 V AC

	Features		Color	15 Amp	20 Amp
ILLUMINATED	**Single Pole** • Lighted Handle Locator - Toggle Illuminated when OFF • Side Wire • Does Not Require a Neutral Wire • Fed Spec Rated	FED SPEC	White	5501-LHW	—
			Ivory	5501-LHI	—
	3-Way • Lighted Handle Locator - Toggle Illuminated when OFF • Side Wire • Does Not Require a Neutral Wire • Fed Spec Rated	FED SPEC	White	5503-LHW	—
			Ivory	5503-LHI	—

54522-2

1101-CE

5503-LHW

COMMERCIAL SPECIFICATION GRADE

347 V AC

	Features		Color	15 Amp	20 Amp	30 Amp
FRAMED TOGGLE	**Single Pole** • Framed Toggle • Side Wire • Non-Grounding • Canadian		White	18201-CW	—	—
			Ivory	18201-CI	—	—
			Brown	18201-CB	—	—
			Gray	18201-CG	—	—
	Double Pole • Framed Toggle • Side Wire • Non-Grounding • Canadian		White	18202-CW	—	—
			Ivory	18202-CI	—	—
	3-Way • Framed Toggle • Side Wire • Non-Grounding • Canadian		White	18203-CW	—	—
			Ivory	18203-CI	—	—
			Brown	18203-CB	—	—
			Gray	18203-CG	—	—
	4-Way • Framed Toggle • Side Wire • Non-Grounding • Canadian		White	18204-CW	—	—
			Ivory	18204-CI	—	—
			Gray	18204-CG	—	—

18201-CW

INDUSTRIAL SPECIFICATION GRADE

120/277 V AC

	Features		Color	15 Amp	20 Amp	30 Amp
STANDARD TOGGLE	**Single Pole** • Back and Side Wire • Self-Grounding • Fed Spec Rated	FED SPEC	White	1201-2W	1221-2W	3031-2W
			Ivory	1201-2I	1221-2I	3031-2I
			Lt Almond	—	1221-2T	—
			Brown	1201-2	1221-2	3031-2
			Gray	1201-2GY	1221-2GY	—
			Black	—	1221-2E	—
			Red	1201-2R	1221-2R	—
	Double Pole • Back and Side Wire • Self-Grounding • Fed Spec Rated	FED SPEC	White	1202-2W	1222-2W	3032-2W
			Ivory	1202-2I	1222-2I	3032-2I
			Lt Almond	—	1222-2T	—
			Brown	1202-2	1222-2	3032-2
			Gray	1202-2GY	1222-2GY	—
			Black	—	1222-2E	3032-2E
			Red	—	1222-2R	3032-2R
	3-Way • Back and Side Wire • Self-Grounding • Fed Spec Rated	FED SPEC	White	1203-2W	1223-2W	3033-2W
			Ivory	1203-2I	1223-2I	3033-2I
			Lt Almond	1203-2T	1223-2T	—
			Brown	1203-2	1223-2	3033-2
			Gray	1203-2GY	1223-2GY	—
			Black	1203-2E	1223-2E	—
			Red	1203-2R	1223-2R	—
	4-Way • Back and Side Wire • Self-Grounding • Fed Spec Rated	FED SPEC	White	1204-2W	1224-2W	—
			Ivory	1204-2I	1224-2I	—
			Lt Almond	—	1224-2T	—
			Brown	1204-2	1224-2	—
			Gray	1204-2GY	1224-2GY	—
			Black	—	1224-2E	—
			Red	—	1224-2R	—

3032-2I

1204-2GY

Toggle Switches

INDUSTRIAL SPECIFICATION GRADE

120/277 V AC

	Features		Color	15 Amp	20 Amp	30 Amp
STANDARD TOGGLE	**Single Pole** • Back and Side Wire • Fed Spec Rated	FED SPEC	White	—	1221-SW	—
			Ivory	—	1221-SI	—
			Lt Almond	—	1221-ST	—
			Brown	—	1221-S	—
			Gray	—	1221-SGY	—
			Red	—	1221-SR	—
	Double Pole • Back and Side Wire • Fed Spec Rated	FED SPEC	White	—	1222-SW	—
			Ivory	—	1222-SI	—
			Brown	—	1222-S	—
			Gray	—	1222-SGY	—
	3-Way • Back and Side Wire • Fed Spec Rated	FED SPEC	White	—	1223-SW	—
			Ivory	—	1223-SI	—
			Lt Almond	—	1223-ST	—
			Brown	—	1223-S	—
			Gray	—	1223-SGY	—
			Red	—	1223-SR	—
	4-Way • Back and Side Wire • Fed Spec Rated	FED SPEC	White	—	1224-SW	—
			Ivory	—	1224-SI	—
			Brown	—	1224-S	—
			Gray	—	1224-SGY	—

120 V AC

	Features		Color	15 Amp	20 Amp	30 Amp
ILLUMINATED	**Single Pole** • Lighted Handle Locator - Toggle Illuminated when OFF • Back and Side Wire • Self-Grounding • Does Not Require a Neutral Wire • Fed Spec Rated	FED SPEC	White	1201-LHW	1221-LHW	—
			Ivory	1201-LHI	1221-LHI	3031-LHI
			Red	—	1221-LHR	—
			Clear	1201-LHC	1221-LHC	
	3-Way • Lighted Handle Locator - Toggle Illuminated when OFF • Back and Side Wire • Self-Grounding • Does Not Require a Neutral Wire • Fed Spec Rated	FED SPEC	White	1203-LHW	1223-LHW	—
			Ivory	1203-LHI	1223-LHI	—
			Red	—	1223-LHR	—
			Clear	1203-LHC	1223-LHC	—

1221-ST

1221-LHW

3031-LHI
Single Pole Illuminated when OFF Toggle
with SSJ1-C40 Stainless Steel Midway Wallplate

SS2-40
C-Series Type 302/304 Stainless Steel
2 Gang Toggle Switch.

Additional wallplate options appear on page 22.

INDUSTRIAL SPECIFICATION GRADE

120 V AC

	Features	Color	15 Amp	20 Amp	30 Amp
PILOT LIGHT	**Single Pole** • Pilot Light - Toggle Illuminated when ON • Back and Side Wire • Self-Grounding • Requires a Neutral Wire • Fed Spec Rated	Red	1201-PLR	1221-PLR	3031-PLR
		Clear	1201-PLC	1221-PLC	—
	Double Pole • Pilot Light - Toggle Illuminated when ON • Back and Side Wire • Self-Grounding • Fed Spec Rated	Red	1202-PLR	1222-PLR	3032-PLR
		Clear	—	1222-PLC	3032-PLC
	3-Way • Pilot Light - Toggle Illuminated when ON • Back and Side Wire • Two 6", #18AWG AWM TEW Leads (1 Black & 1 White) • Self-Grounding • Requires a Neutral Wire • Fed Spec Rated	Red	1203-PLR	1223-PLR	—
		Clear	1203-PLC	1223-PLC	—

277 V AC

	Features	Color	15 Amp	20 Amp	30 Amp
ILLUMINATED	**Single-Pole** • Lighted Handle Locator - Toggle Illuminated when OFF • Back and Side Wire • Self-Grounding • Fed Spec Rated	White	—	1221-7LW	—
		Ivory	—	1221-7LI	—
		Clear	—	1221-7LC	—
	3-Way • Lighted Handle Locator - Toggle Illuminated when OFF • Back and Side Wire • Self-Grounding • Fed Spec Rated	White	—	1223-7LW	—
		Ivory	—	1223-7LI	—
		Clear	—	1223-7LC	—
PILOT LIGHT	**Single Pole** • Pilot Light - Toggle Illuminated when ON • Back and Side Wire • Self-Grounding • Requires a Neutral Wire • Fed Spec Rated	Red	—	1221-7PR	—
		Clear	—	1221-7PC	—
	Double Pole • Pilot Light - Toggle Illuminated when ON • Back and Side Wire • Self-Grounding • Fed Spec Rated	Red	—	1222-7PR	—

3032-PLC

1203-PLC

1222-7PR

Toggle Switches

INDUSTRIAL SPECIFICATION GRADE

277 V AC

	Features	Color	15 Amp	20 Amp	30 Amp
PILOT LIGHT	**3-Way** • Pilot Light - Toggle Illuminated when ON • Back and Side Wire • Two 6", #18AWG AWM TEW Leads (1 Black & 1 White) • Self-Grounding • Requires a Neutral Wire • Fed Spec Rated	Red	—	1223-7PR	—

347 V AC

	Features	Color	15 Amp	20 Amp	30 Amp
STANDARD TOGGLE	**Single Pole** • Back and Side Wire • Non-Grounding • Canadian	White	18201-W	18221-W	—
		Ivory	18201-I	18221-I	—
		Brown	18201-B	18221-B	—
		Gray	18201-G	18221-G	—
		Red	18201-R	18221-R	—
	Double Pole • Back and Side Wire • Non-Grounding • Canadian	Ivory	—	18222-I	—
		Brown	—	18222-B	—
	3-Way • Back and Side Wire • Non-Grounding • Canadian	White	18203-W	18223-W	—
		Ivory	18203-I	18223-I	—
		Brown	18203-B	18223-B	—
		Gray	18203-G	18223-G	—
		Red	18203-R	18223-R	—
	4-Way • Back and Side Wire • Non-Grounding • Canadian	White	—	18224-W	—
		Ivory	18204-I	18224-I	—
		Brown	18204-B	18224-B	—
		Gray	18204-G	—	—
		Red	18204-R	—	—

1223-7PR

18201-W

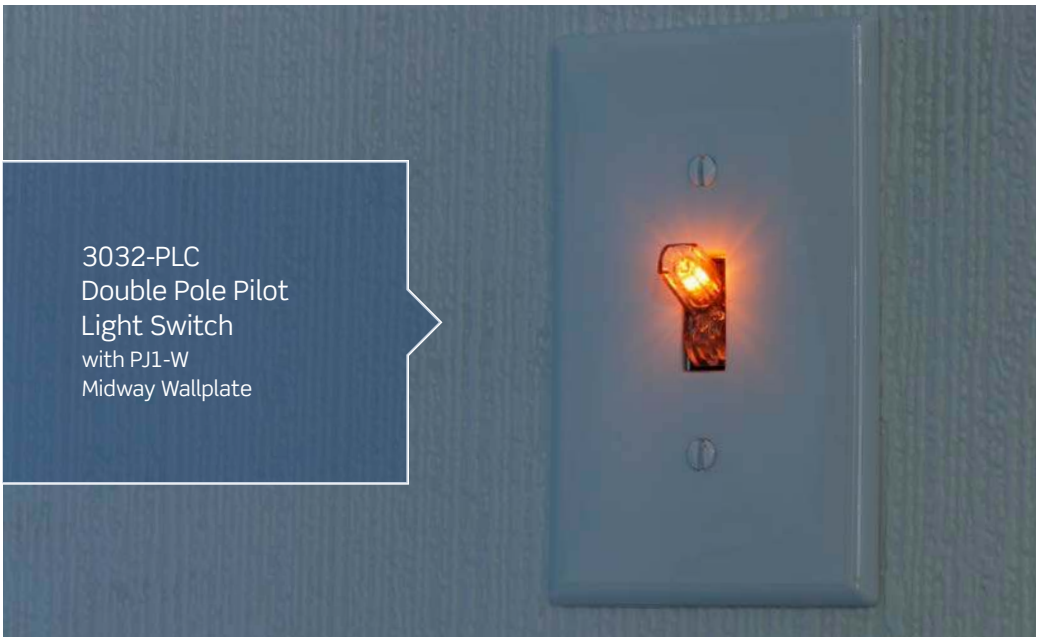

3032-PLC
Double Pole Pilot
Light Switch
with PJ1-W
Midway Wallplate

Explore our full line of wallplate options online at **leviton.com/wallplates**

COMMERCIAL SPECIFICATION GRADE

120/277 V AC

	Features	Color	15 Amp	20 Amp
DECORA PLUS™	**Single Pole** • Back and Side Wire • Self-Grounding	White	5691-2W	5621-2W
		Ivory	5691-2I	5621-2I
		Lt Almond	5691-2T	5621-2T
		Brown	5691-2	5621-2
		Gray	5691-2GY	5621-2GY
		Black	5691-2E	5621-2E
		Red	—	5621-2R
	Double Pole • Back and Side Wire • Self-Grounding	White	—	5622-2W
		Ivory	—	5622-2I
		Lt Almond	—	5622-2T
		Gray	—	5622-2GY
		Black	—	5622-2E
		Red	—	5622-2R
	3-Way • Back and Side Wire • Self-Grounding	White	5693-2W	5623-2W
		Ivory	5693-2I	5623-2I
		Lt Almond	5693-2T	5623-2T
		Brown	5693-2	5623-2
		Gray	5693-2GY	5623-2GY
		Black	5693-2E	5623-2E
		Red	—	5623-2R
	4-Way • Back and Side Wire • Self-Grounding	White	—	5624-2W
		Ivory	—	5624-2I
		Lt Almond	—	5624-2T
		Brown	—	5624-2
		Gray	—	5624-2GY
		Black	—	5624-2E
		Red	—	5624-2R

120 V AC

	Features	Color	15 Amp	20 Amp
PILOT LIGHT	**Single Pole** • Pilot Light - Rocker Illuminated when ON • Back and Side Wire • Requires a Neutral Wire • Self-Grounding	White	—	5628-2W
		Ivory	—	5628-2I
		Lt Almond	—	5628-2T
	3-Way • Pilot Light - Rocker Illuminated when ON • Back and Side Wire • Two 6", #18AWG AWM TEW Leads (1 Black & 1 White) • Requires a Neutral Wire • Self-Grounding	White	—	5638-2W
		Ivory	—	5638-2I

5621-2

5623-2R

5628-2T

Decora Plus™ Switches

LEVITON

COMMERCIAL SPECIFICATION GRADE

120 V AC

	Features	Color	15 Amp	20 Amp
ILLUMINATED	**Single-Pole** • Lighted Rocker Locator - Rocker Illuminated when OFF • Back and Side Wire • Self-Grounding	White	—	5631-2W
		Ivory	—	5631-2I
		lt Almond	—	5631-2T
		Gray	—	5631-2GY
		Black	—	5631-2E
	Double Pole • Lighted Rocker Locator - Rocker Illuminated when OFF • Back and Side Wire • Self-Grounding	White	—	5633-2W
		Ivory	—	5633-2I
		Lt Almond	—	5633-2T
		Black	—	5633-2E

5633-2I

277 V AC

	Features	Color	15 Amp	20 Amp
PILOT LIGHT	**Single Pole** • Pilot Light - Rocker Illuminated when ON • Back and Side Wire • Requires a Neutral Wire • Self-Grounding	White	—	5629-2W
	3-Way • Pilot Light - Rocker Illuminated when ON • Back and Side Wire • Two 6", #18AWG AWM TEW Leads (1 Black & 1 White) • Requires a Neutral Wire • Self-Grounding	White	—	5639-2W
ILLUMINATED	**Single Pole** • Lighted Rocker Locator - Rocker Illuminated when OFF • Back and Side Wire • Self-Grounding	White	—	5649-2W
	3-Way • Lighted Rocker Locator - Rocker Illuminated when OFF • Back and Side Wire • Self-Grounding	White	—	5659-2W

5659-2W

347 V AC

	Features	Color	15 Amp	20 Amp
DECORA PLUS™	**Single Pole** • Back and Side Wire • Non-Grounding • Canadian	White	5691-CW	5621-CW
		Ivory	5691-CI	5621-CI
		Gray	5691-CG	—
		Black	5691-CE	—
		Red	5691-CR	—
	3-Way • Back and Side Wire • Non-Grounding • Canadian	White	5693-CW	5623-CW
		Ivory	5693-CI	—
		Gray	5693-CG	—
		Black	5693-CE	—
	4-Way • Back and Side Wire • Non-Grounding • Canadian	White	5694-CW	5624-CW

5691-CG

lev-lok® Switches

The perfect productivity solution for electrical construction and maintenance applications, the Lev-lok Modular Wiring Device System includes switches, receptacles, USBs, GFCIs and occupancy sensors. Simply connect the leaded wiring module to the back of the device for quick and easy assembly!

INDUSTRIAL SPECIFICATION GRADE

120/277 V AC

	Features	Color	15 Amp	20 Amp
STANDARD TOGGLE	**Single Pole** • Self-Grounding • Fed Spec Rated • MSPSW mating module required FED SPEC	White	M1201-W	M1221-W
		Ivory	M1201-I	M1221-I
		Lt Almond	—	M1221-T
		Brown	—	M1221
		Gray	M1201-GY	M1221-GY
		Black	—	M1221-E
		Red	M1201-R	M1221-R
	3-Way • Self-Grounding • Fed Spec Rated • M3WSW mating module required FED SPEC	White	M1203-W	M1223-W
		Ivory	M1203-I	M1223-I
		Lt Almond	—	M1223-T
		Brown	M1203	M1223
		Gray	M1203-GY	M1223-GY
		Black	—	M1223-E
		Red	M1203-R	M1223-R
	Single Pole • Antimicrobial Treated • Self-Grounding • Fed Spec Rated • MSPSW mating module required FED SPEC	White	—	AM120-W
		Ivory	—	AM120-I
		Gray	—	AM120-GY
		Red	—	AM120-R
	3-Way • Antimicrobial Treated • Self-Grounding • Fed Spec Rated • M3WSW mating module required FED SPEC	White	—	AM320-W
		Ivory	—	AM320-I
		Gray	—	AM320-GY
		Red	—	AM320-R

KEY FEATURES AND BENEFITS

Future Proof

It's 5x faster to replace devices in a facility to meet future needs, whether you're updating technology or meeting new requirements.

Compress Timelines

Accelerate installation and swap outs to complete projects faster than using traditional wiring.

Accurate & Secure Connection

Lev-lok lowers the risk of incorrect installation while providing a safe and secure connection.

INDUSTRIAL SPECIFICATION GRADE

120 V AC

	Features	Color	15 Amp	20 Amp
ILLUMINATED	**Single Pole** • Lighted Handle Locator - Toggle Illuminated when OFF • Self-Grounding • Fed Spec Rated • MSPSW mating module required	White	M1201-LHW	M1221-LHW
		Ivory	—	M1221-LHI
		Red	—	M1221-LHR
		Clear	M1201-LHC	M1221-LHC
	3-Way • Lighted Handle Locator - Toggle Illuminated when OFF • Self-Grounding • Fed Spec Rated • M3WSW mating module required	White	M1203-LHW	M1223-LHW
		Clear	M1203-LHC	M1223-LHC

M1223-LHC

INDUSTRIAL SPECIFICATION GRADE

120/277 V AC

TAMPER-RESISTANT (KEY)	**Single Pole** • Tamper-Resistant (Key) • Self-Grounding • Fed Spec Rated • MSPSW mating module required	White	—	M1221-WL
		Ivory	M1201-IL	M1221-IL
		Brown	M1201-L	M1221-L
		Gray	—	M1221-GL
		Red	—	M1221-RL
	3-Way • Tamper-Resistant (Key) • Self-Grounding • Fed Spec Rated • M3WSW mating module required	White	—	M1223-WL
		Ivory	M1203-IL	M1223-IL
		Brown	M1203-L	M1223-L
		Gray	—	M1223-GL
		Red	—	M1223-RL

M1221-WL

INDUSTRIAL SPECIFICATION GRADE

120/277 V AC

	Features	Color	15 Amp	20 Amp
DECORA PLUS™	**Single Pole** • Self-Grounding • MSPSW mating module required	White	M5691-W	M5621-W
		Ivory	M5691-I	M5621-I
		Lt Almond	M5691-T	M5621-T
		Brown	—	M5621
		Gray	M5691-GY	M5621-GY
		Red	—	M5621-R
	3-Way • Self-Grounding • M3WSW mating module required	White	M5693-W	M5623-W
		Ivory	M5693-I	M5623-I
		Lt Almond	M5693-T	M5623-T
		Brown	—	M5623
		Gray	M5693-GY	M5623-GY
		Red	—	M5623-R
ILLUMINATED	**Single Pole** • Lighted Rocker Locator - Rocker Illuminated when OFF • Self-Grounding • MSPSW mating module required	White	—	M5631-W
		Ivory	—	M5631-I
		Lt Almond	—	M5631-T
	3-Way • Lighted Rocker Locator - Rocker Illuminated when OFF • Self-Grounding • M3WSW mating module required	White	—	M5633-W
		Ivory	—	M5633-I
		Lt Almond	—	M5633-T

M5631-I

MODULES

Description	Module Color	Wire Type	Wire Colors	Catalog #
FOR SINGLE POLE SWITCHES, 20 A, 347 V AC MAX.				
Stranded Wire Leads	Yellow	THHN	Black, Black, Green	MSPSW-ST
Stranded Wire Leads w/Push-in Wire Connectors	Yellow	THHN	Black, Black, Green	MSPSW-WST
Solid Wire Leads	Yellow	THHN	Black, Black, Green	MSPSW-SD
Stranded Wire Leads for 277 V Lighting Applications	Yellow	THHN	Brown, Brown, Green	MSPSW-7ST
Solid Wire Leads for 277 V Lighting Applications	Yellow	THHN	Brown, Brown, Green	MSPSW-7SD
FOR 3-WAY SWITCHES, 20 A, 347 V AC MAX.				
Stranded Wire Leads	Yellow	XHHW-2	Black, Red, Red, Green	M3WSW-ST
Stranded Wire Leads w/Push-in Wire Connectors	Yellow	XHHW-2	Black, Red, Red, Green	M3WSW-WST
Stranded Wire Leads for 277 V Lighting Applications	Yellow	XHHW-2	Brown, Yellow, Yellow, Green	M3WSW-7ST
Solid Wire Leads	Yellow	XHHW-2	Black, Red, Red, Green	M3WSW-SD

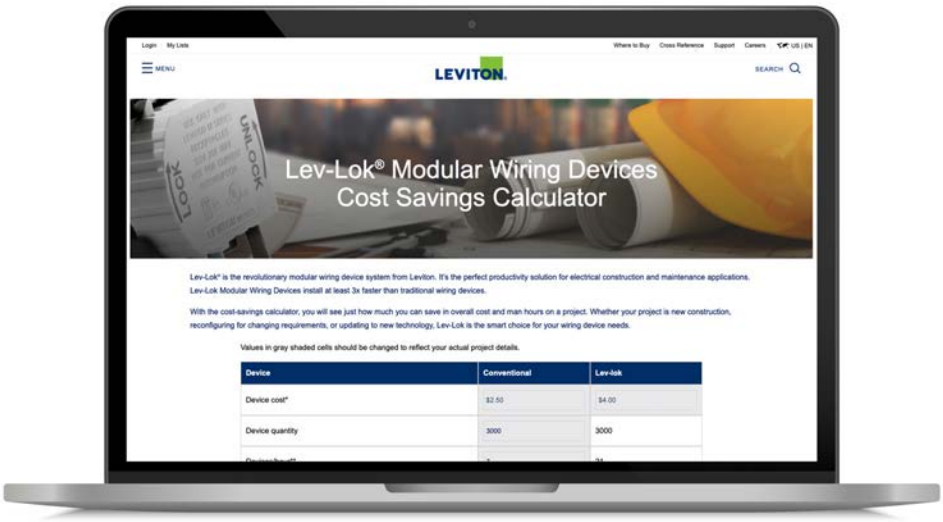

— CALCULATE YOUR SAVINGS ONLINE —
www.leviton.com/levlokcalculator

FOR MORE INFORMATION ON THE FULL LINE: www.leviton.com/levlok

Antimicrobial Treated Devices

LEVITON

Antimicrobial treated devices from Leviton contain an EPA registered silver ion additive that protects our switches and wallplates from contamination.

(WALLPLATES SOLD SEPARATELY)

NSF

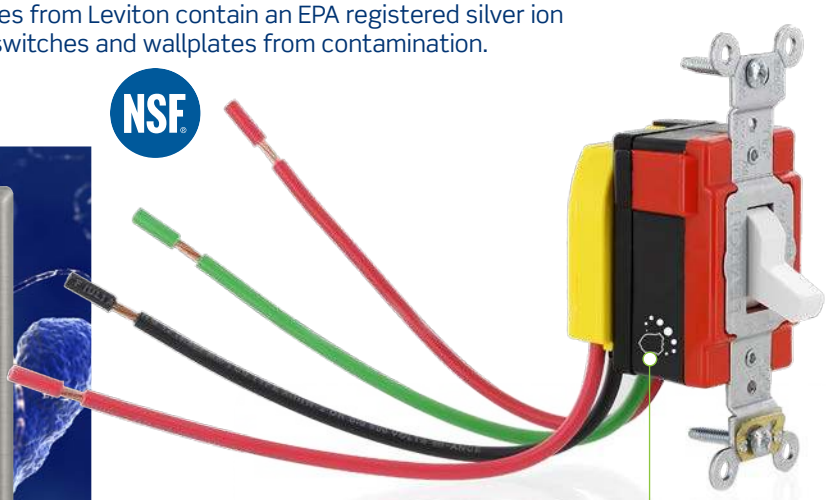

A1221-2W
Standard Toggle with
84001-A40 Wallplate
(SOLD SEPARATELY)

Also available in Lev-lok Modular Wiring Versions AM320-W Shown

Look for the antimicrobial marking on treated wallplates and switches

A1223-GY

INDUSTRIAL SPECIFICATION GRADE

120/277 V AC

	Features	Color	15 Amp	20 Amp
STANDARD TOGGLE	**Single Pole** • Antimicrobial Treated • Back and Side Wire • Self-Grounding • Fed Spec Rated	White	—	A1221-2W
		Ivory	—	A1221-2I
		Gray	—	A1221-GY
		Red	—	A1221-2R
	3-Way • Antimicrobial Treated • Back and Side Wire • Self-Grounding • Fed Spec Rated	White	—	A1223-2W
		Ivory	—	A1223-2I
		Gray	—	A1223-GY
		Red	—	A1223-2R
LEV-LOK® MODULAR	**Single Pole** • Antimicrobial Treated • Self-Grounding • Fed Spec Rated • MSPSW mating module required	White	—	AM120-W
		Ivory	—	AM120-I
		Gray	—	AM120-GY
		Red	—	AM120-R
	3-Way • Antimicrobial Treated • Self-Grounding • Fed Spec Rated • M3WSW mating module required	White	—	AM320-W
		Ivory	—	AM320-I
		Gray	—	AM320-GY
		Red	—	AM320-R

WALLPLATES

Antimicrobial Treated Single Gang Toggle	84001-A40
Antimicrobial Treated Single Gang Toggle Marked "EMERGENCY"	84001-E4A
Antimicrobial Treated Wallplate Two Gang Toggle	84009-A40

84009-A40
Toggle Wallplate
(SOLD SEPARATELY)

Antimicrobial Treated Devices

COMMERCIAL SPECIFICATION GRADE

120/277 V AC

	Features	Color	15 Amp	20 Amp
DECORA PLUS™	**Single Pole** • Antimicrobial Treated • Back and Side Wire • Self-Grounding	White	—	A5621-2W
		Ivory	—	A5621-2I
		Gray	—	A5621-2GY
		Red	—	A5621-2R
	3-Way • Antimicrobial Treated • Back and Side Wire • Self-Grounding	White	—	A5623-2W
		Ivory	—	A5623-2I
		Gray	—	A5623-2GY
		Red	—	A5623-2R
SPECIALTY	**Single Pole Double Throw** • Antimicrobial Treated • Momentary Contact, Center OFF • Back and Side Wire • Self-Grounding • *Available on special request*	White	A5657-2W	—
		Ivory	A5657-2I	—

A5621-2I

24 V AC/DC

	Features	Color	3 Amp	
SPECIALTY	**Single Pole Double Throw** • Antimicrobial Treated • Low Voltage • Momentary Contact, Center OFF • Back and Side Wire • Self-Grounding • *Available on special request*	White	56A81-2W	—
		Ivory	56A81-2I	—

WALLPLATES

Antimicrobial Treated Single Gang Decora Plus™	84401-A40
Antimicrobial Treated Single Gang Decora Plus™ Marked "EMERGENCY"	84401-E4A
Antimicrobial Treated Two Gang Decora Plus™	84409-A40

A5623-2W Decora Plus™ with 84401-A40 Wallplate
(SOLD SEPARATELY)

84409-A40
Decora Plus™ Wallplate
(SOLD SEPARATELY)

Specialty Switches

Leviton offers a wide variety of switches that are tailor-made for simple, unique or challenging applications.

INCLUDES...

- Tamper-Resistant
- Key Locking
- Momentary
- Maintained
- Hospital Call
- Low Voltage

From fitness facilities to pools, conveyor systems to cooling fans, gates to lifts, Leviton has the switch to fit your need. For help choosing the appropriate solutions, contact your local Leviton sales representative.

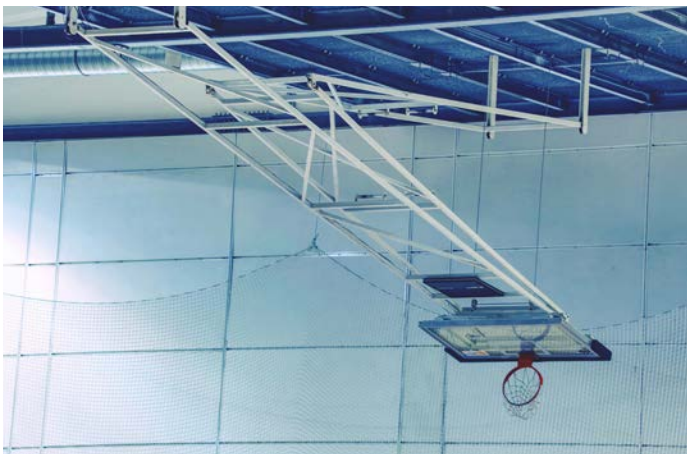

INDUSTRIAL SPECIFICATION GRADE

120/277 V AC

	Features	Color	15 Amp	20 Amp	30 Amp
TAMPER-RESISTANT (KEY)	**Single Pole** • Tamper-Resistant (Key) • Back and Side Wire • Self-Grounding • Fed Spec Rated (FED SPEC)	White	—	1221-2WL	—
		Ivory	1201-2IL	1221-2IL	—
		Brown	1201-2L	1221-2L	3031-2L
		Gray	—	1221-2GL	—
		Red	—	1221-2RL	—
	Double Pole • Tamper-Resistant (Key) • Back and Side Wire • Self-Grounding • Fed Spec Rated (FED SPEC)	Ivory	—	1222-2IL	—
		Brown	1202-2L	1222-2L	3032-2L
	3-Way • Tamper-Resistant (Key) • Back and Side Wire • Self-Grounding • Fed Spec Rated (FED SPEC)	White	—	1223-2WL	—
		Ivory	1203-2IL	1223-2IL	—
		Brown	1203-2L	1223-2L	3033-2L
		Gray	—	1223-2GL	—
	4-Way • Tamper-Resistant (Key) • Back and Side Wire • Self-Grounding • Fed Spec Rated (FED SPEC)	White	—	1224-2WL	—
		Ivory	—	1224-2IL	—
		Brown	1204-2L	1224-2L	—
		Gray	—	1224-2GL	—
KEY LOCKING	**Single Pole** • Key Locking • Back and Side Wire • Self-Grounding	Chrome Lock	—	1221-2KL	—
	Double Pole • Key Locking • Back and Side Wire • Self-Grounding	Chrome Lock	—	1222-2KL	—
	3-Way • Key Locking • Back and Side Wire • Self-Grounding	Chrome Lock	—	1223-2KL	—
	4-Way • Key Locking • Back and Side Wire • Self-Grounding	Chrome Lock	—	1224-2KL	—
MOMENTARY CONTACT TOGGLE	**Single Pole Double Throw** • Momentary Contact, Center OFF • Back and Side Wire • Self-Grounding	White	1256-W	1257-W	—
		Ivory	1256-I	1257-I	—
		Lt Almond	—	1257-T	—
		Brown	1256	1257	1260
		Gray	1256-GY	1257-GY	—
		Red	—	1257-R	—
	Single Pole Double Throw • Momentary Contact, Center OFF • Tamper-Resistant (Key) • Back and Side Wire • Self-Grounding	Black	—	1257-L	—
	Double Pole Double Throw • Momentary Contact, Center OFF • Back and Side Wire • Self-Grounding	Brown	—	—	1262

3031-2L

1221-2KL

1256-W

Specialty Switches

LEVITON

INDUSTRIAL SPECIFICATION GRADE

120/277 V AC

	Features	Color	15 Amp	20 Amp	30 Amp
MAINTAINED CONTACT TOGGLE	**Single Pole Double Throw** • Maintained Contact, Center OFF • Back and Side Wire • Self-Grounding	White	1281-W	1285-W	—
		Ivory	1281-I	1285-I	1287-I
		Lt Almond	—	1285-T	—
		Brown	1281	1285	1287
		Gray	—	1285-GY	—
	Double Pole Double Throw • Maintained Contact, Center OFF • Back and Side Wire • Self-Grounding	White	1282-W	1286-W	1288-W
		Ivory	1282-I	1286-I	1288-I
		Brown	1282	1286	1288
TAMPER-RESISTANT (MAINTAINED)	**Single Pole Double Throw** • Maintained Contact, Center OFF • Tamper-Resistant (Key) • Back and Side Wire • Self-Grounding	Black	1281-L	1285-L	1287-L
	Double Pole Double Throw • Maintained Contact, Center OFF • Tamper-Resistant (Key) • Back and Side Wire • Self-Grounding	Black	—	—	1288-L
HOSPITAL CALL TOGGLE	**Single Pole** • Hospital Call • Back & Side Wired • Fed Spec Rated	Ivory	5501-8I	—	—
		Brown	5501-8	—	—
	Double Pole • Hospital Call • Back & Side Wired • Fed Spec Rated	Brown	5502-8	—	—

1287-L

5501-8I

INDUSTRIAL SPECIFICATION GRADE

347 V AC

	Features	Color	15 Amp	20 Amp
TAMPER-RESISTANT (KEY)	**Single Pole** • Tamper-Resistant (Key) • Back and Side Wire • Non-Grounding • Canadian	Brown	18201-LB	18221-LB
	Double Pole • Tamper-Resistant (Key) • Back and Side Wire • Non-Grounding • Canadian	Brown	18202-LB	18222-LB
	3-Way • Tamper-Resistant (Key) • Back and Side Wire • Non-Grounding • Canadian	Brown	18203-LB	18223-LB

18222-LB

ACCESSORIES

Key for Tamper-Resistant Switch	55500-PRT
Replacement Key for Key Locking Switch	2KL

INDUSTRIAL SPECIFICATION GRADE

24 V AC/DC

	Features	Color	3 Amp
LOW VOLTAGE TOGGLE	**Single Pole** • Back & Side Wired • Self-Grounding	White	12021-2W
		Ivory	12021-2I
	Single Pole Double Throw • Back and Side Wire • Momentary Contact, Center OFF • Self-Grounding	White	1081-W
		Ivory	1081-I
		Gray	1081-GY
		Red	1081-R

1081-W

COMMERCIAL SPECIFICATION GRADE

120/277 V AC

	Features	Color	15 Amp
MOMENTARY CONTACT DECORA PLUS™	**Single Pole** • Momentary Contact • Back & Side Wired • Self-Grounding	White	5655-2W
		Ivory	5655-2I
		Lt Almond	5655-2T
		Black	5655-2E
	Single Pole Double Throw • Momentary Contact, Center OFF • Back & Side Wired • Self-Grounding	White	5657-2W
		Ivory	5657-2I
		Lt Almond	5657-2T
		Brown	5657-2
		Gray	5657-2GY
		Black	5657-2E
MAINTAINED CONTACT DECORA PLUS™	**Single Pole Double Throw** • Maintained Contact, Center OFF • Back & Side Wired • Self-Grounding • Rocker imprinted with "HIGH" / "OFF" /"LOW" *(On special request only - Catalog No. 5685-BW)*	White	5685-2W
		Ivory	5685-2I
		Lt Almond	5685-2T
		Gray	5685-2GY
		Black	5685-2E
	Double Pole Double Throw • Maintained Contact, Center OFF • Green Grounding Lead • Back & Side Wired • Self-Grounding	White	5686-2W
		Ivory	5686-2I
		Lt Almond	5686-2T

5685-2W

COMMERCIAL SPECIFICATION GRADE

24 V AC/DC

	Features	Color	3 Amp
LOW VOLTAGE DECORA PLUS™	**Single Pole** • Low Voltage • Back and Side Wire • Self-Grounding	White	56021-2W
		Ivory	56021-2I
		Black	56021-2E
	Single Pole Single Throw • Low Voltage • 1 Position Momentary Contact • Back and Side Wire • Self-Grounding	White	56080-2W
		Ivory	56080-2I
		Lt Almond	56080-2T
		Black	56080-2E
	Single Pole Double Throw • Low Voltage • 3 Position Momentary Contact, Center OFF • Back and Side Wire • Self-Grounding	White	56081-2W
		Ivory	56081-2I
		Brown	56081-2
		Red	56081-2R

56021-2W

Select Wallplates Quick Order Guide

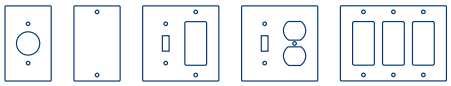

For the **FULL** offering of Leviton wallplates, visit **leviton.com/wallplates**

C-SERIES STAINLESS STEEL WALLPLATES

	Description	Stainless Steel	
		Type 430	Type 302/304
1-GANG	Toggle Switch	SL1	SS1-40
	Toggle Switch, Midway	SLJ1-C	SSJ1-C40
	Decora®/Decora Plus™/GFCI	SL26	SS26-40
	Decora®/Decora Plus™/GFCI, Midway	SLJ82-C	SSJ82-C40
2-GANG	2 Toggle Switch	SL2	SS2-40
	2 Toggle Switch, Midway	SLJ2-C	SSJ2-C40
	1 Toggle Switch, 1 Duplex Receptacle	SL18	SS18-40
	1 Toggle Switch, 1 Decora®/Decora Plus™/GFCI	SL126	SS126-40
	2 Decora®/Decora Plus™/GFCI	SL262	SS262-40
	2 Decora®/Decora Plus™/GFCI, Midway	SLJ62-C	SSJ62-C40

SL26

84001-LOK

84401-G40

84071-40

COVER-GS

SPECIALTY WALLPLATES

	Description	Cat. No.
SPECIALTY	**Gasketed Wallplate, Stainless Steel, 1-gang** For use with Decora®/Decora Plus™/GFCI/Occupancy Sensors	84401-G40
	Gasketed Wallplate, Stainless Steel, 1-gang, White For use with Decora®/Decora Plus™/GFCI/Occupancy Sensors	84409-G40
	Gasketed Wallplate, Stainless Steel, 2-gang For use with Decora®/Decora Plus™/GFCI/Occupancy Sensors	84401-G4W
	Gasketed Wallplate, Stainless Steel, 2-gang, White For use with Decora®/Decora Plus™/GFCI/Occupancy Sensors	84409-G4W
	Lockout Wallplate for Toggle Switches, Type 302 Stainless Steel Includes Tamper-Resistant Screws and Spanner Wrench (Lock Not Included)	84001-LOK
	Wallplate for Key Locking Switches, Type 302 Stainless Steel, 1-gang Includes Tamper-Resistant Screws and Spanner Wrench	84071-40
	Wallplate for Key Locking Switches, Type 302 Stainless Steel, 2-gang Includes Tamper-Resistant Screws and Spanner Wrench	84072-40
	Wallplate for Key Locking Switches, Type 302 Stainless Steel, 3-gang Includes Tamper-Resistant Screws and Spanner Wrench	84073-40
	Wetguard® Watertight (IP66, NEMA 4X) Toggle Switch Cover, FS/FD mount, Yellow For use with 15-40 A Toggle Switches	COVER-S
	Wetguard® Watertight (IP66, NEMA 4X) Toggle Switch Cover, FS/FD mount, Gray For use with 15-40 A Toggle Switches	COVER-GS

SINGLE POLE AND SINGLE POLE ILLUMINATED

① Line Hot (Brass Screw)

② Load (Brass Screw)

③ Ground (Green Screw)

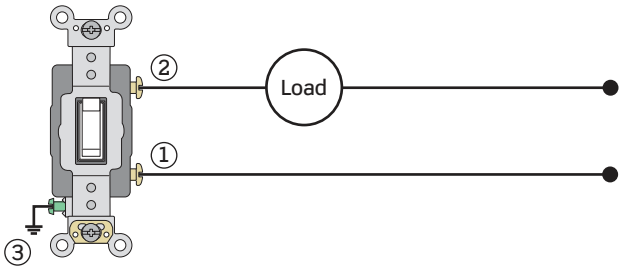

SINGLE POLE PILOT LIGHT

① Line Hot (Black Screw)

② Neutral (Silver Screw)

③ Load (Brass Screw)

④ Ground (Green Screw)

NOTE: Neutral connection required.

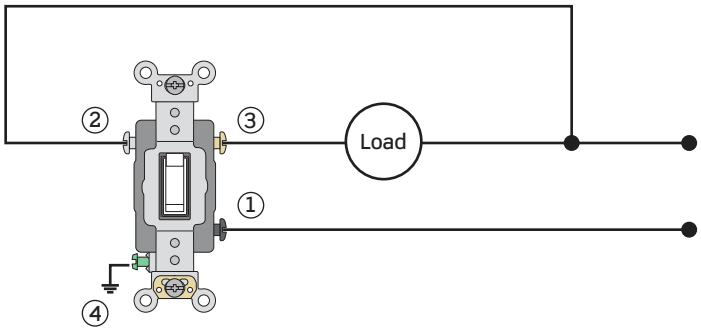

DOUBLE POLE AND DOUBLE POLE PILOT LIGHT

① Line Hot (Black Screw)
Circuit A

② Line Hot (Black Screw
Circuit B

③ Load (Brass Screw)
Circuit A

④ Load (Brass Screw)
Circuit B

⑤ Ground (Green Screw)

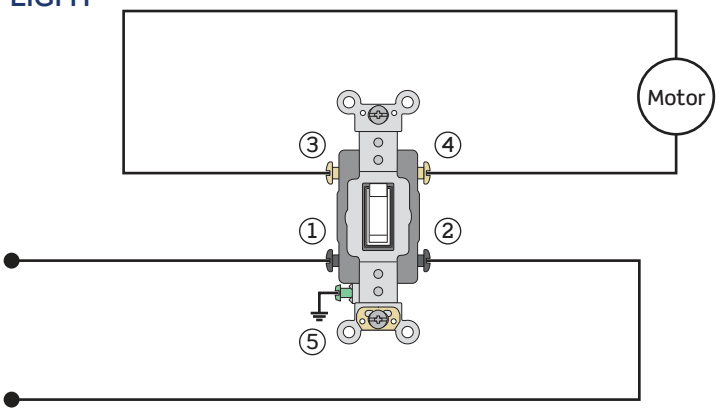

Wiring Diagrams

3-WAY AND 3-WAY ILLUMINATED

① Line Hot / Common (Black Screw)

② Travelers (Brass Screw to Brass Screw)

③ Load / Common (Black Screw)

④ Ground (Green Screw)

NOTE: Do not use this wiring configuration with 3-Way Pilot Light switches.

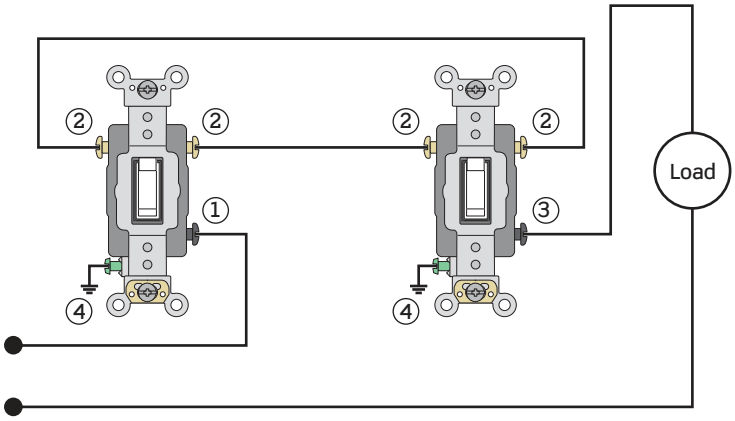

3-WAY PILOT LIGHT

① Line Hot / Common (Black Screw)

② Travelers (Brass Screw to Brass Screw)

③ Ground (Green Screw)

④ Load / Common (Black Screw)

⑤ Black Lead from Switch

⑥ White Lead from Switch

⑦ Neutral (White Wire)

NOTE: Neutral connection required.
Black lead must connect to load at both switch locations.
May require additional wiring to work properly.

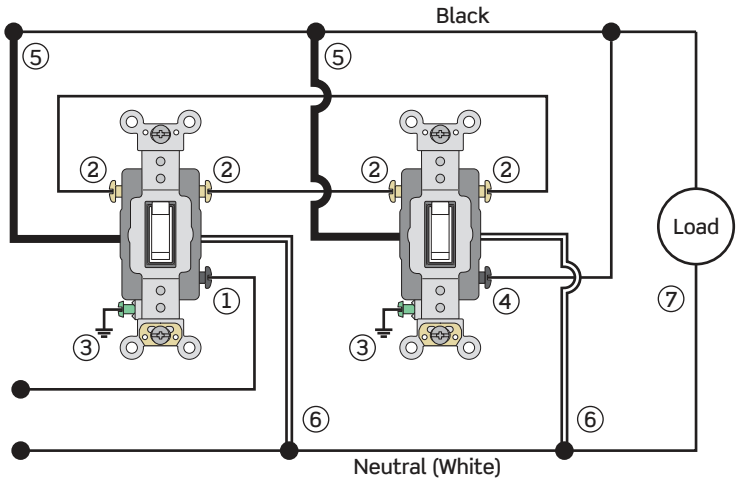

4-WAY

① Line Hot / Common (Black Screw)

② Travelers (Brass Screw from 3-Way to Brass Screw from 4-Way)

③ Ground (Green Screw)

④ Load / Common (Black Screw)

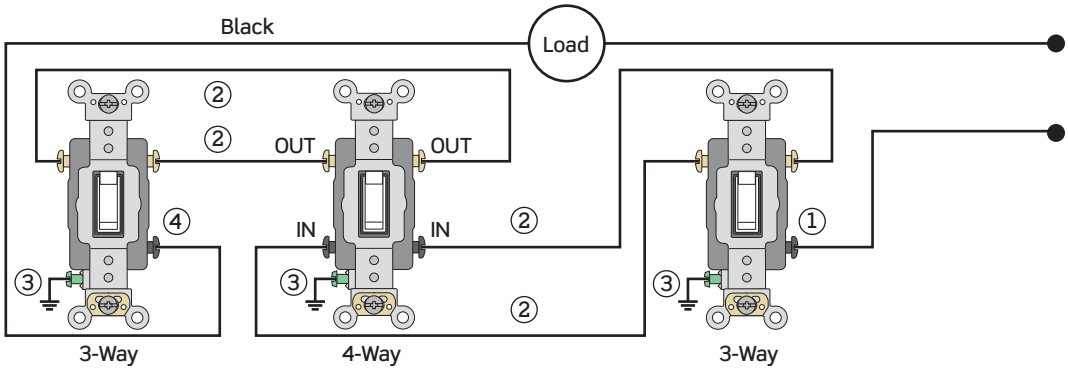

NOTE: Do not use 3-Way pilot light switches in a 4-Way application.

Leviton Manufacturing Co., Inc.
201 N Service Rd, Melville, NY 11747
Telephone: 1-800-323-8920 • Tech Line: 1-800-824-3005 (M-F 8AM-10PM EST, Sat 9AM-7PM EST)

Visit our Website at: leviton.com/commercialswitches email: commercial@leviton.com

SCAN TO EXPLORE ALL PRODUCT DETAILS & VIDEOS

© 2026 Leviton Manufacturing Co., Inc. All rights reserved. Specifications subject to change without notice. 26-CI-0016A