Halco LIGHTING TECHNOLOGIES

DATE:		LOCATION:	
TYPE:		PROJECT:	
CATALOG #:			

LED Luminaires

Retrofit Commercial Downlight

- Field Adjustable CCT and Lumen Output
- ELV/Triac or 0-10V Dimmable with one driver
- Two Finish Options: White Reflector & Flange or Haze Reflector with White Flange
- Integral quick-connect emergency battery backup

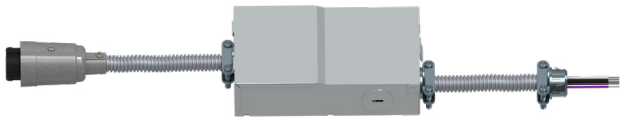

Specifications

Description

Halco's Retrofit Commercial Downlights are a quick, easy, and convenient way to reinvent commercial lighting spaces. Color temperatures and light output can be chosen before or after installation with the flip of a switch. There is no need to worry about what type of dimming is currently being used in the space as the integral fixture driver for the CDL Series can dim using either 0-10V or ELV/Triac phase cut protocols. When emergency lighting is needed, the CDLEM family offers an aesthetically pleasing integral emergency battery backup solution. The robust spring clips and quick connect metal clad cables makes installation of the fixture and battery backup a breeze and the low profile combination test switch and charging indicator light eliminate large, unsightly ceiling and fixture mounted buttons. White and Haze colored reflectors, combined with all the other fixture options of the CDL family complete the look and make your commercial retrofit lighting projects a success.

Performance

- Selectable Color Temperatures 2700K, 3000K, 3500K, 4000K, 5000K
- 90+ CRI
- 120-277V, 50/60 Hz, ELV/Triac and 0-10V dimming driver
- 70 Lumen Maintenance
- L70 Lumen Maintenance > 50,000 hours
- 5 Year Limited Warranty

Construction

- Powder Coated Steel (White) or Spun Aluminum (Haze) Reflectors
- Diffused, Textured Lens
- Robust, Universal Spring Clips

Applications

- Office Parks
- Commercial Buildings
- Commercial Maintenance Facilities
- K-12 Schools, Colleges and Universities
- Big Box Retail Stores

Certifications

- Energy Star Downlights V1.0
- ETL Listed and Classified
- RoHS compliant
- IP65
- Wet Location
- FCC Compliant
- CA Title 24 Compliant

Halco Lighting Technologies 2940 Pacific Drive | Norcross, GA 30071 | Toll Free 800.677.3334 | Phone 770.242.3612 | Fax 800.880.0822 | halcolighting.com | Atlanta | Cleveland | Houston | New Jersey | Phoenix © 2026 Halco Lighting Technologies, LLC. All rights reserved. Halco and ProLED are registered trademarks of Halco Lighting Technologies. All sizes and specifications are subject to change without notice.

DATE:		LOCATION:	
TYPE:		PROJECT:	
CATALOG #:			

Retrofit Commercial Downlight

Ordering Logic:

Series	-	Fixture Size	-	Lumen Output	-	Color Temperature	-	Reflector/Flange Finish	-	Voltage
CDL = Retrofit Commercial Downlight **CDLEM** = Retrofit Commercial Downlight with Emergency Battery Backup		**4** = 4″Round **6** = 6″ Round **8** = 8″ Round **10** = 10″ Round		**LS** = Lumen Selectable 4 - 600/800/1000 6 - 1000/1800/2500 8 - 1800/2700/3500 10 - 2800/3500/4500		**CS** = Color Selectable, 2700K/3000K/ 3500K/4000K/5000K		**HZWH** = Haze Reflector, White Flange **WH** = White Reflector, White Flange		**DDV** = Dual Dimming Universal 120-277V 0-10V or 120V TRIAC/ELV

Trim Ordering Logic:

Series	-	Fixture Size	-	Option	-	Reflector/Flange Finish
CDL = Retrofit Commercial Downlight		**4** = 4″ **6** = 6″ **8** = 8″ **10** = 10″		**REFL** = Snap-on Reflector and Flange Trim		**HZT** = Haze Reflector, Haze Flange **BLT** = Black Reflector, Black Flange* **HZBL** = Haze Reflector, Black Flange*

*Black Trims only available in 4" & 6"

Ordering Information

Product SKU	Product Code	Product Description	Equiv Watts	Replaces SKU	Energy Star Unique Product ID
89210	CDL-4-LS-CS-WH-DDV	4in Commercial Downlight, Lumen Output and CCT Select, 120-277V, Dimmable TRIAC/ELV & 0-10V, White Reflector, White Flange	75W	88984	4005956
89211	CDL-6-LS-CS-WH-DDV	6in Commercial Downlight, Lumen Output and CCT Select, 120-277V, Dimmable TRIAC/ELV & 0-10V, White Reflector, White Flange	150W	88985	4005957
89212	CDL-8-LS-CS-WH-DDV	8in Commercial Downlight, Lumen Output and CCT Select, 120-277V, Dimmable TRIAC/ELV & 0-10V, White Reflector, White Flange	200W	88986	4005959
89213	CDL-10-LS-CS-WH-DDV	10in Commercial Downlight, Lumen Output and CCT Select, 120-277V, Dimmable TRIAC/ELV & 0-10V, White Reflector, White Flange	250W	88987	4005958
89214	CDL-4-LS-CS-HZWH-DDV	4in Commercial Downlight, Lumen Output and CCT Select, 120-277V, Dimmable TRIAC/ELV & 0-10V, Haze Reflector, White Flange	75W		4005956
89215	CDL-6-LS-CS-HZWH-DDV	6in Commercial Downlight, Lumen Output and CCT Select, 120-277V, Dimmable TRIAC/ELV & 0-10V, Haze Reflector, White Flange	150W		4005957
89216	CDL-8-LS-CS-HZWH-DDV	8in Commercial Downlight, Lumen Output and CCT Select, 120-277V, Dimmable TRIAC/ELV & 0-10V, Haze Reflector, White Flange	200W		4005959
89217	CDL-10-LS-CS-HZWH-DDV	10in Commercial Downlight, Lumen Output and CCT Select, 120-277V, Dimmable TRIAC/ELV & 0-10V, Haze Reflector, White Flange	250W		4005958

Halco Lighting Technologies 2940 Pacific Drive | Norcross, GA 30071 | Toll Free 800.677.3334 | Phone 770.242.3612 | Fax 800.880.0822 | halcolighting.com | Atlanta | Cleveland | Houston | New Jersey | Phoenix
© 2026 Halco Lighting Technologies, LLC. All rights reserved. Halco and ProLED are registered trademarks of Halco Lighting Technologies. All sizes and specifications are subject to change without notice.

Retrofit Commercial Downlight

CDLEM Ordering Information

Need to order (1) CDLEM-JB battery backup with each fixture head.

ORDERING EXAMPLE:
89219 CDLEM-6-LS-CS-WH-DDV
89226 CDLEM-EMBB

Product SKU	Product Code	Product Description	Equiv Watts	Energy Star Unique Product ID
89218	CDLEM-4-LS-CS-WH-DDV	4in Commercial Downlight, Emergency Battery Ready, Lumen Output and CCT Select, 120-277V, Dimmable TRIAC/ELV & 0-10V, White Reflector, White Flange	75W	4439214
89219	CDLEM-6-LS-CS-WH-DDV	6in Commercial Downlight, Emergency Battery Ready, Lumen Output and CCT Select, 120-277V, Dimmable TRIAC/ELV & 0-10V, White Reflector, White Flange	150W	4439215
89220	CDLEM-8-LS-CS-WH-DDV	8in Commercial Downlight, Emergency Battery Ready, Lumen Output and CCT Select, 120-277V, Dimmable TRIAC/ELV & 0-10V, White Reflector, White Flange	200W	4439216
89221	CDLEM-10-LS-CS-WH-DDV	10in Commercial Downlight, Emergency Battery Ready, Lumen Output and CCT Select, 120-277V, Dimmable TRIAC/ELV & 0-10V, White Reflector, White Flange	250W	4439217
89222	CDLEM-4-LS-CS-HZWH-DDV	4in Commercial Downlight, Emergency Battery Ready, Lumen Output and CCT Select, 120-277V, Dimmable TRIAC/ELV & 0-10V, Haze Reflector, White Flange	75W	4439214
89223	CDLEM-6-LS-CS-HZWH-DDV	6in Commercial Downlight, Emergency Battery Ready, Lumen Output and CCT Select, 120-277V, Dimmable TRIAC/ELV & 0-10V, Haze Reflector, White Flange	150W	4439215
89224	CDLEM-8-LS-CS-HZWH-DDV	8in Commercial Downlight, Emergency Battery Ready, Lumen Output and CCT Select, 120-277V, Dimmable TRIAC/ELV & 0-10V, Haze Reflector, White Flange	200W	4439216
89225	CDLEM-10-LS-CS-HZWH-DDV	10in Commercial Downlight, Emergency Battery Ready, Lumen Output and CCT Select, 120-277V, Dimmable TRIAC/ELV & 0-10V, Haze Reflector, White Flange	250W	4439217
89226	CDLEM-JB	CDL Emergency Battery, 3.5W , For CDLEM 4in, 6in, 8in, 10in		
Accessories				
89227	CDL-4-REFL-HZT	4in Commercial Downlight Reflector Insert, Haze Reflector, Haze Flange		
89228	CDL-6-REFL-HZT	6in Commercial Downlight Reflector Insert, Haze Reflector, Haze Flange		
89229	CDL-8-REFL-HZT	8in Commercial Downlight Reflector Insert, Haze Reflector, Haze Flange		
89230	CDL-10-REFL-HZT	10in Commercial Downlight Reflector Insert, Haze Reflector, Haze Flange		
89247	CDL-4-REFL-BLT	4in Commercial Downlight Reflector Insert, Black Reflector, Black Flange		
89248	CDL-4-REFL-HZBL	4in Commercial Downlight Reflector Insert, Haze Reflector, Black Flange		
89249	CDL-6-REFL-BLT	6in Commercial Downlight Reflector Insert, Black Reflector, Black Flange		
89250	CDL-6-REFL-HZBL	6in Commercial Downlight Reflector Insert, Haze Reflector, Black Flange		

Halco Lighting Technologies 2940 Pacific Drive | Norcross, GA 30071 | Toll Free 800.677.3334 | Phone 770.242.3612 | Fax 800.880.0822 | halcolighting.com | Atlanta | Cleveland | Houston | New Jersey | Phoenix © 2026 Halco Lighting Technologies, LLC. All rights reserved. Halco and ProLED are registered trademarks of Halco Lighting Technologies. All sizes and specifications are subject to change without notice.

Retrofit Commercial Downlight

Performance Table

			2700K		3000K		3500K		4000K		5000K	
Product SKU	**Product Code**	**Selectable Wattage**	**Lumen Output (lm)**	**Efficacy (lm/W)**	**Lumen Output (lm)**	**Efficacy (lm/W)**	**Lumen Output (lm)**	**Efficacy (lm/W)**	**Lumen Output (lm)**	**Efficacy (lm/W)**	**Lumen Output (lm)**	**Efficacy (lm/W)**
89210	**CDL-4-LS-CS-WH-DDV**	10W	1072	107	1101	111	1130	115	1147	117	1139	114
89211	**CDL-6-LS-CS-WH-DDV**	21W	2565	126	2647	129	2718	134	2763	136	2732	133
89212	**CDL-8-LS-CS-WH-DDV**	30W	3553	124	3650	128	3784	133	3835	134	3787	131
89213	**CDL-10-LS-CS-WH-DDV**	37W	4557	126	4686	129	4839	135	4907	136	4833	133
89214	**CDL-4-LS-CS-HZWH-DDV**	10W	1081	108	1111	112	1139	116	1156	118	1148	115
89215	**CDL-6-LS-CS-HZWH-DDV**	21W	2579	126	2665	130	2734	135	2776	137	2743	134
89216	**CDL-8-LS-CS-HZWH-DDV**	30W	3572	123	3691	126	3811	132	3861	134	3805	130
89217	**CDL-10-LS-CS-HZWH-DDV**	37W	4588	126	4734	130	4896	136	4969	137	4891	134
89218	**CDLEM-4-LS-CS-WH-DDV**	11W	1065	97	1097	101	1125	104	1139	105	1125	102
89219	**CDLEM-6-LS-CS-WH-DDV**	22W	2585	124	2651	126	2710	131	2735	131	2686	128
89220	**CDLEM-8-LS-CS-WH-DDV**	31W	3576	121	3684	124	3788	129	3826	130	3756	126
89221	**CDLEM-10-LS-CS-WH-DDV**	38W	4589	124	4731	128	4887	134	4948	135	4862	131
89222	**CDLEM-4-LS-CS-HZWH-DDV**	11W	1076	98	1101	101	1125	104	1138	105	1118	102
89223	**CDLEM-6-LS-CS-HZWH-DDV**	22W	2610	126	2673	129	2731	133	2764	134	2703	130
89224	**CDLEM-8-LS-CS-HZWH-DDV**	31W	3597	123	3701	126	3805	131	3847	132	3756	127
89225	**CDLEM-10-LS-CS-HZWH-DDV**	38W	4582	126	4699	128	4838	134	4901	135	4798	131

Dimmer Compatibility List

Type	Dimmer Brand	Series	Dimmer Model
0-10V	LUTRON	DIVA	DVTV
	LEVITON	IllumaTech	IP710-LFZ
	LUTRON	DIVA	DVSTV-WH
	COOPER	Decorator	DF10PC1
TRIAC	LUTRON	Maestro C-L	MACL-153M
	LUTRON	Skylark C-L	SCL-153P
	LEVITON	Sureslide	Cat.NO.6674
	LUTRON	Diva C-L	DVCL-153P
	LEGRAND	Radiant	RHCL453PTC
	LEGRAND	Harmony	DCL453PTCCCV6
	LEGRAND	Harmony	HCL453PTCCCV6
	LUTRON	Skylark	CTCL-153PDH-WH
	LEVITON	IllumaTech	R50-IPL06-10M
	LUTRON	Diva C-L	DVWCL-153PH-WH

Halco Lighting Technologies 2940 Pacific Drive | Norcross, GA 30071 | Toll Free 800.677.3334 | Phone 770.242.3612 | Fax 800.880.0822 | halcolighting.com | Atlanta | Cleveland | Houston | New Jersey | Phoenix
© 2026 Halco Lighting Technologies, LLC. All rights reserved. Halco and ProLED are registered trademarks of Halco Lighting Technologies. All sizes and specifications are subject to change without notice.

DATE:	LOCATION:
TYPE:	PROJECT:
CATALOG #:	

Retrofit Commercial Downlight

Specifications Table

	CDL-4-LS-CS-xx-DDV CDLEM-4-LS-xx-DDV	CDL-6-LS-CS-xx-DDV CDLEM-6-LS-xx-DDV	CDL-8-LS-CS-xx-DDV CDLEM-8-LS-xx-DDV	CDL-10-LS-CS-xx-DDV CDLEM-10-LS-xx-DDV
Nominal Wattage	CDL - 6 / 8 / 10 CDLEM - 7 / 9 / 11	CDL - 10 / 17 / 21 CDLEM - 11 / 18 / 22	CDL - 16 / 24 / 30 CDLEM - 17 / 25 / 31	CDL - 24 / 30 / 37 CDLEM - 25 / 31 / 38
Delivered Lumens	600 / 800 / 1000	1000 / 1800 / 2500	1800 / 2700 / 3500	2800 / 3500 / 4500
Efficacy (lm/W)	100	125	125	125
CCT	Selectable - 2700K, 3000K, 3500K, 4000K or 5000K			
CRI	90+			
L70 Lifetime (hrs)	50,000			
Voltage	120-277V			
Power Factor	0.9			
Dimming	Yes (Triac/ELV or 0-10V)			
Beam Angle	80° ± 10°			
Housing Material	Powder Coated Steel (White) or Spun Aluminum (Haze) Reflectors			
Lens	Diffused, Textured Lens			
Operating Temperature	-4°F to 104°F (-20°C to 40°C)			
Listings	ETL Listed & Classified/FCC/Energy Star/T24			
Environment	IC, Air Tight, Wet			
Warranty	5 Years Standard			
Weight (lbs.)	1.1	1.5	2.0	2.2

Halco Lighting Technologies 2940 Pacific Drive | Norcross, GA 30071 | Toll Free 800.677.3334 | Phone 770.242.3612 | Fax 800.880.0822 | halcolighting.com | Atlanta | Cleveland | Houston | New Jersey | Phoenix
© 2026 Halco Lighting Technologies, LLC. All rights reserved. Halco and ProLED are registered trademarks of Halco Lighting Technologies. All sizes and specifications are subject to change without notice.

DATE:		LOCATION:	
TYPE:		PROJECT:	
CATALOG #:			

Retrofit Commercial Downlight

Dimensions

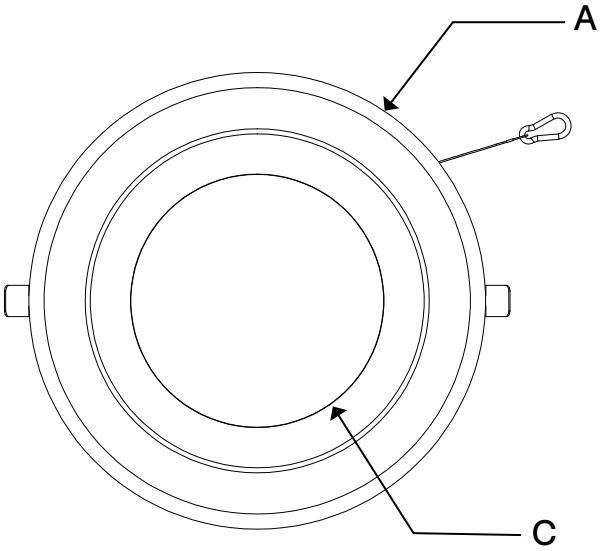

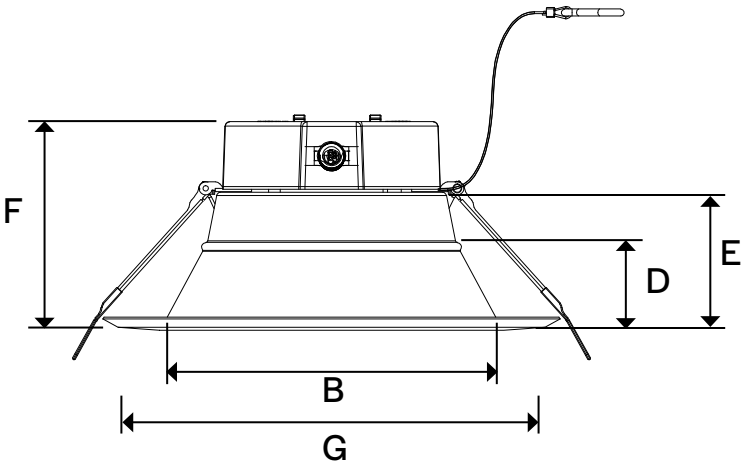

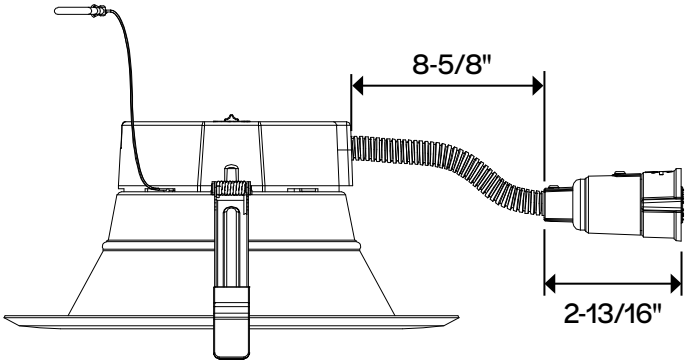

Letter	Description	4" CDL & CDLEM	6" CDL & CDLEM	8" CDL & CDLEM	10" CDL & CDLEM
A	Flange Outside Diameter	Ø5-1/2"	Ø7-3/8"	Ø9-7/16"	Ø11-1/4"
B	Flange Inside Diameter	Ø4"	Ø5-5/16"	Ø7"	Ø8"
C	Lens Diameter	Ø3-1/2"	Ø4-1/8"	Ø5-1/4"	Ø5-3/4"
D	Lens Recess Height	1-5/16"	1-1/2"	1-3/4"	1-3/4"
E	Spring Height	2-1/2"	2-3/4"	3-1/16"	3-1/16"
F	Fixture Height	3-3/4"	4-1/16"	4-7/16"	4-7/16"
G	Ceiling Cut Out	4-5/16"	6"	8"	9"

Halco Lighting Technologies 2940 Pacific Drive | Norcross, GA 30071 | Toll Free 800.677.3334 | Phone 770.242.3612 | Fax 800.880.0822 | halcolighting.com | Atlanta | Cleveland | Houston | New Jersey | Phoenix
© 2026 Halco Lighting Technologies, LLC. All rights reserved. Halco and ProLED are registered trademarks of Halco Lighting Technologies. All sizes and specifications are subject to change without notice.

DATE:		LOCATION:	
TYPE:		PROJECT:	
CATALOG #:			

Retrofit Commercial Downlight

Dimensions

CDLEM-JB

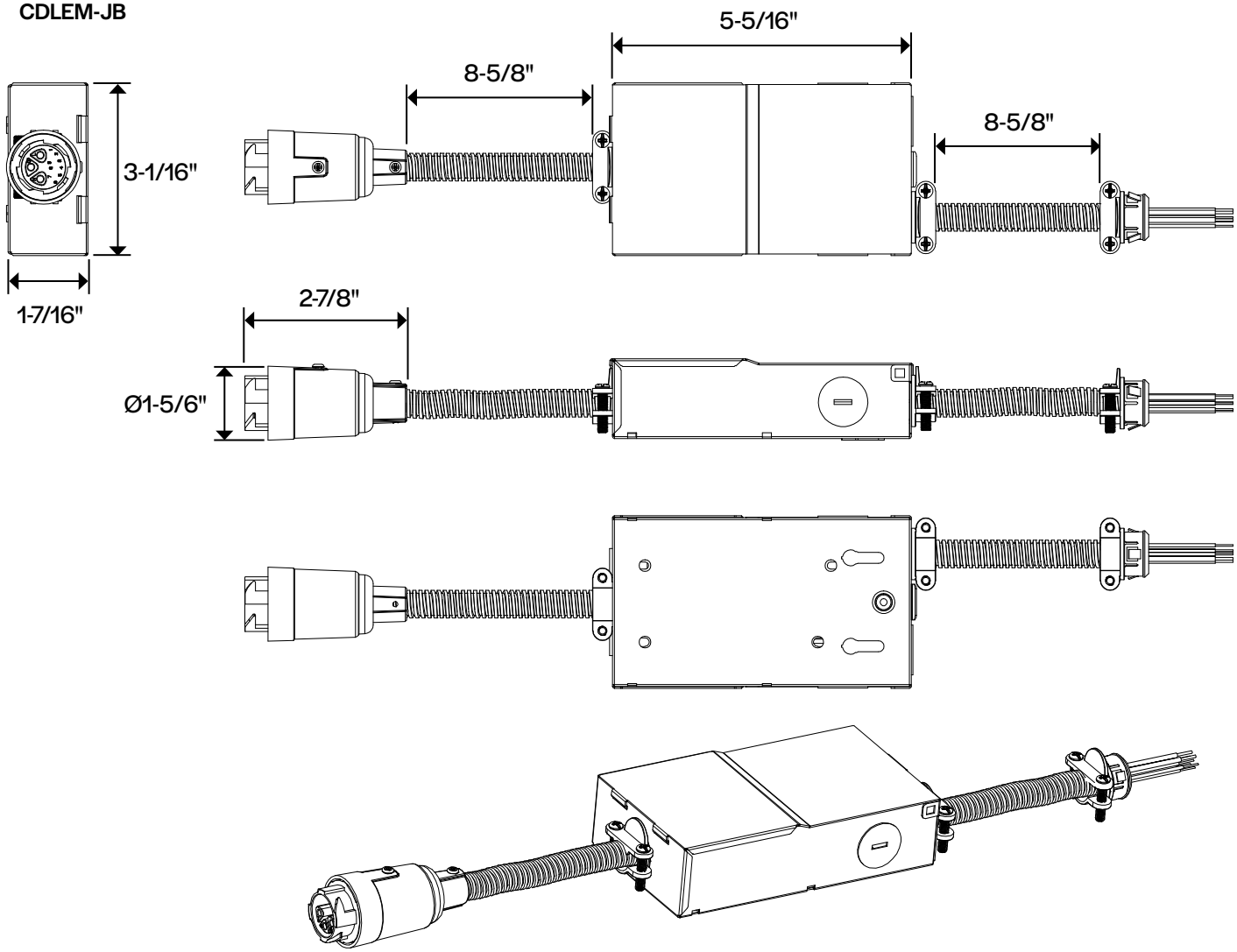

Halco Lighting Technologies 2940 Pacific Drive | Norcross, GA 30071 | Toll Free 800.677.3334 | Phone 770.242.3612 | Fax 800.880.0822 | halcolighting.com | Atlanta | Cleveland | Houston | New Jersey | Phoenix © 2026 Halco Lighting Technologies, LLC. All rights reserved. Halco and ProLED are registered trademarks of Halco Lighting Technologies. All sizes and specifications are subject to change without notice.

DATE:		LOCATION:	
TYPE:		PROJECT:	
CATALOG #:			

LED Luminaires

Retrofit Commercial Downlight

Photometric Information

89214 CDL-4-LS-CS-HZWH-DDV4000K30W

CDL-4-LS-CS-HZWH-DDV Set to 4000K

Color Vector Graphics

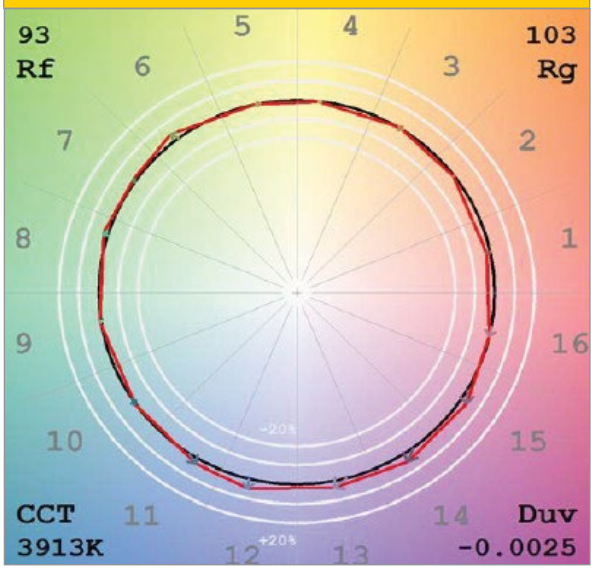

Information

RF	93
RG	103

Zonal Lumen Summary

Zonal	Lumens	% Fixture
0° - 10°	64	6%
10° - 20°	174	15%
20° - 30°	260	22%
30° - 40°	282	24%
40° - 50°	215	19%
50° - 60°	108	9%
60° - 70°	41	4%
70° - 80°	11	1%
80° - 90°	1	0%
0° - 90°	1156	100%

CDL-4-LS-CS-HZWH-DDV Set to 4000K

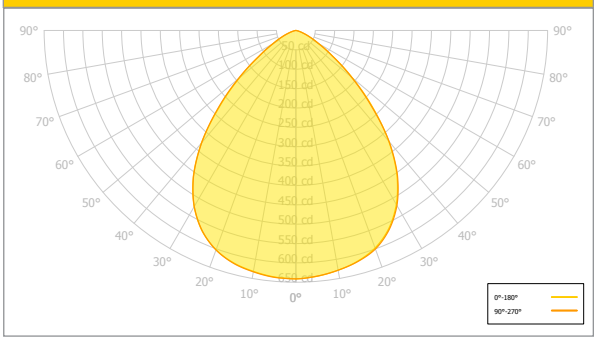

Halco Lighting Technologies 2940 Pacific Drive | Norcross, GA 30071 | Toll Free 800.677.3334 | Phone 770.242.3612 | Fax 800.880.0822 | halcolighting.com | Atlanta | Cleveland | Houston | New Jersey | Phoenix
© 2026 Halco Lighting Technologies, LLC. All rights reserved. Halco and ProLED are registered trademarks of Halco Lighting Technologies. All sizes and specifications are subject to change without notice.

DATE:		LOCATION:	
TYPE:		PROJECT:	
CATALOG #:			

LED Luminaires

Retrofit Commercial Downlight

Photometric Information

89215 CDL-6-LS-CS-HZWH-DDV4000K30W

CDL-6-LS-CS-HZWH-DDV Set to 4000K

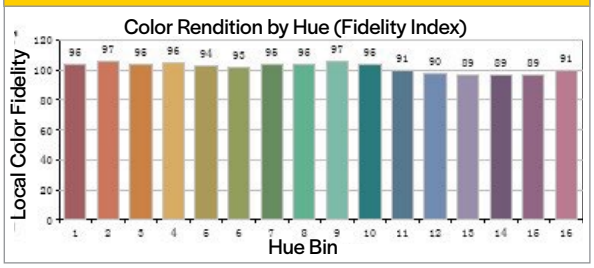

Color Vector Graphics

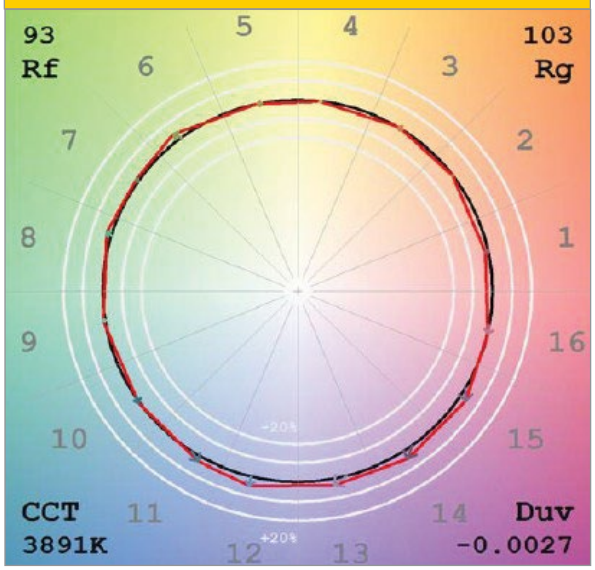

Information

RF	93
RG	103

Zonal Lumen Summary

Zonal	Lumens	% Fixture
0° - 10°	171	6%
10° - 20°	452	16%
20° - 30°	647	23%
30° - 40°	672	24%
40° - 50°	511	18%
50° - 60°	248	9%
60° - 70°	65	2%
70° - 80°	10	0%
80° - 90°	1	0%
0° - 90°	2776	100%

CDL-6-LS-CS-HZWH-DDV Set to 4000K

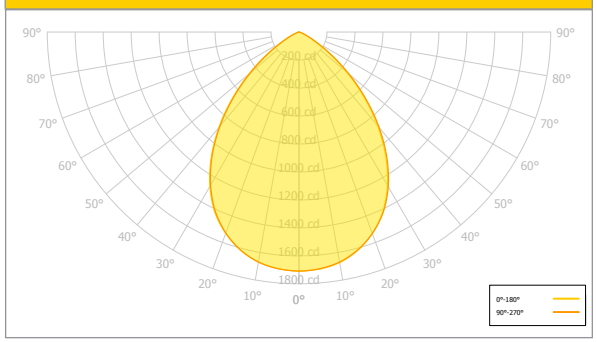

Halco Lighting Technologies 2940 Pacific Drive | Norcross, GA 30071 | Toll Free 800.677.3334 | Phone 770.242.3612 | Fax 800.880.0822 | halcolighting.com | Atlanta | Cleveland | Houston | New Jersey | Phoenix
© 2026 Halco Lighting Technologies, LLC. All rights reserved. Halco and ProLED are registered trademarks of Halco Lighting Technologies. All sizes and specifications are subject to change without notice.

DATE:		LOCATION:	
TYPE:		PROJECT:	
CATALOG #:			

Retrofit Commercial Downlight

Photometric Information

89216 CDL-8-LS-CS-HZWH-DDV4000K30W

CDL-8-LS-CS-HZWH-DDV Set to 4000K

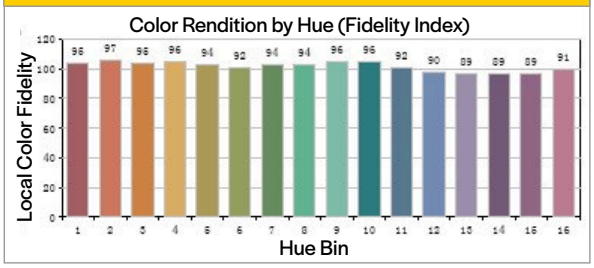

Color Vector Graphics

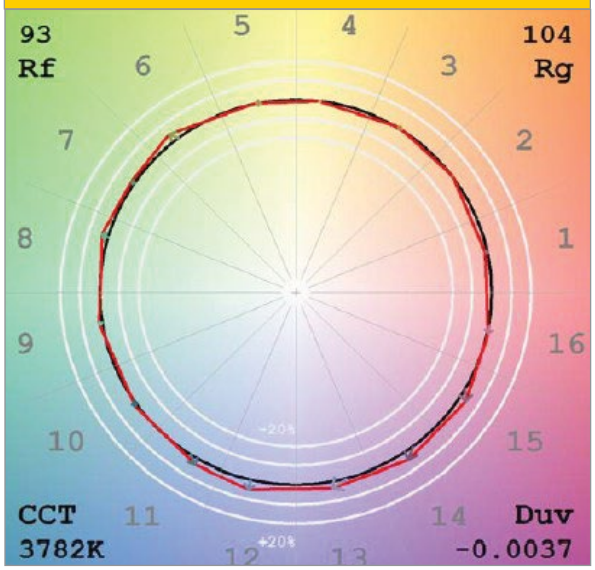

Information

RF	93
RG	104

Zonal Lumen Summary

Zonal	Lumens	% Fixture
0° - 10°	270	7%
10° - 20°	666	17%
20° - 30°	861	22%
30° - 40°	861	22%
40° - 50°	703	18%
50° - 60°	391	10%
60° - 70°	99	3%
70° - 80°	9	0%
80° - 90°	1	0%
0° - 90°	3861	100%

CDL-8-LS-CS-HZWH-DDV Set to 4000K

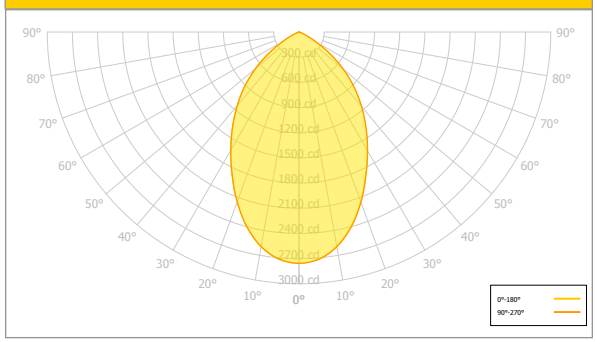

 Halco Lighting Technologies 2940 Pacific Drive | Norcross, GA 30071 | Toll Free 800.677.3334 | Phone 770.242.3612 | Fax 800.880.0822 | halcolighting.com | Atlanta | Cleveland | Houston | New Jersey | Phoenix © 2026 Halco Lighting Technologies, LLC. All rights reserved. Halco and ProLED are registered trademarks of Halco Lighting Technologies. All sizes and specifications are subject to change without notice.

DATE:		LOCATION:	
TYPE:		PROJECT:	
CATALOG #:			

LED Luminaires

Retrofit Commercial Downlight

Photometric Information

89217 CDL-10-LS-CS-HZWH-DDV4000K30W

CDL-10-LS-CS-HZWH-DDV Set to 4000K

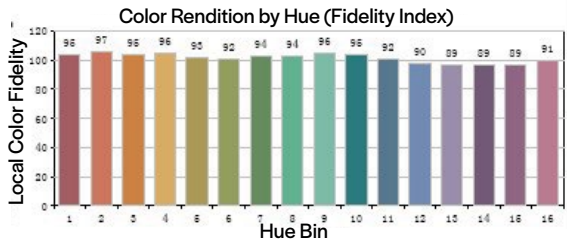

Color Vector Graphics

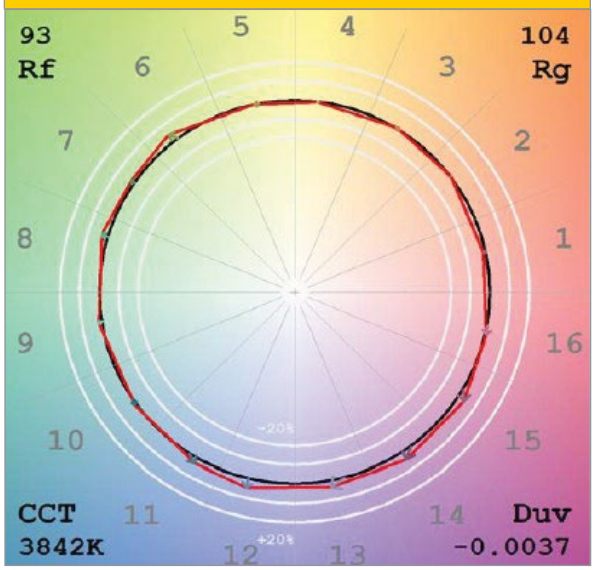

Information

RF	93
RG	104

Zonal Lumen Summary

Zonal	Lumens	% Fixture
0° - 10°	334	7%
10° - 20°	797	16%
20° - 30°	1018	20%
30° - 40°	1054	21%
40° - 50°	925	19%
50° - 60°	613	12%
60° - 70°	204	4%
70° - 80°	21	0%
80° - 90°	2	0%
0° - 90°	4969	100%

CDL-10-LS-CS-HZWH-DDV Set to 4000K

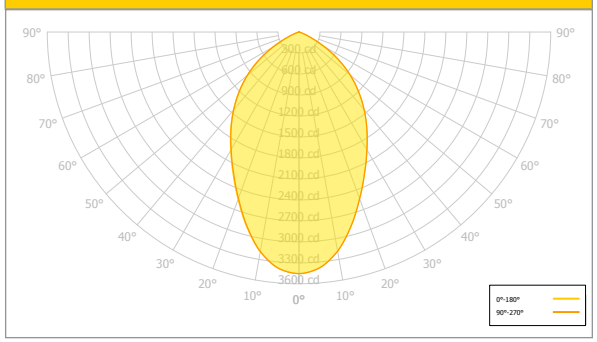

Halco Lighting Technologies 2940 Pacific Drive | Norcross, GA 30071 | Toll Free 800.677.3334 | Phone 770.242.3612 | Fax 800.880.0822 | halcolighting.com | Atlanta | Cleveland | Houston | New Jersey | Phoenix
© 2026 Halco Lighting Technologies, LLC. All rights reserved. Halco and ProLED are registered trademarks of Halco Lighting Technologies. All sizes and specifications are subject to change without notice.

Retrofit Commercial Downlight Accessories

89227 (CDL-4-REFL-HZT) | 89247 (CDL-4-REFL-BLT) | 89248 (CDL-4-REFL-HZBL)

89228 (CDL-6-REFL-HZT) | 89249 (CDL-6-REFL-BLT) | 89250 (CDL-6-REFL-HZBL)

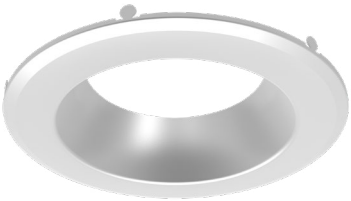

89229 (CDL-8-REFL-HZT)

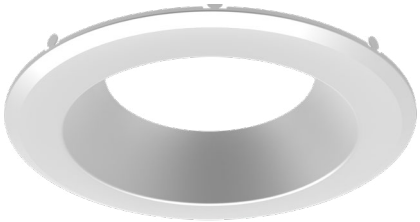

989230 (CDL-10-REFL-HZT)

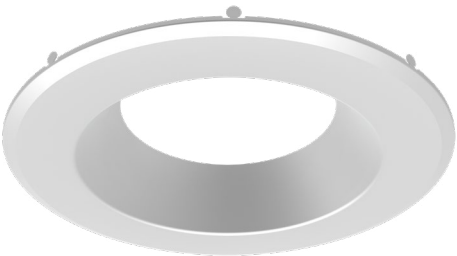

 Halco Lighting Technologies 2940 Pacific Drive | Norcross, GA 30071 | Toll Free 800.677.3334 | Phone 770.242.3612 | Fax 800.880.0822 | halcolighting.com | Atlanta | Cleveland | Houston | New Jersey | Phoenix © 2026 Halco Lighting Technologies, LLC. All rights reserved. Halco and ProLED are registered trademarks of Halco Lighting Technologies. All sizes and specifications are subject to change without notice.