THE POWER TO CREATE BETTER LIGHT ™

Commercial Recessed Downlight

Commercial Grade LED Retrofit Kit

Descriptions:

This advanced commercial recessed downlight retrofit kit easily converts fluorescent troffers to the most current LED technology. Its ultra high efficiency reduces energy costs. It is one of the LED retrofits that comes completely assembled as a lensed kit, requiring only one minute to install, reducing labor costs. The retrofit kit is also 0-10V Dimmable with 5 Year Warranty. Ideal applications include: office, retail, healthcare, education and hospitality interiors.

Features & Benefits:

- Commercial Downlight Retrofit or New Construction
- Universal Voltage 120-277V
- UL for Safety
- Three Adjustable Lumen Output
- Three Adjustable CCT Options (3000K, 3500K, 4000K)
- Driver Efficiency Greater than 85% at full power
- THD ≤ 20% at full power
- High CRI
- Long Life
- Convenient and quick installation
- 0-10V Dimmable
- 25 inch Flexible Conduit
- Auto Recovery Short Circuit Protection, Over Load Protection, Over Voltage Protection
- Ambient Operating Temperature: -30 ~ 40°C
- Works in cold temperature applications
- 5 Year Warranty
- Flicker-free, Meets IEEE 1798-2015

Specifications:

Ordering Code	Size	IC Rated	System Wattage	System Lumens	CCT (K)	System Efficacy	CRI	Input Voltage	Dimming	THD	Power Factor
VEKR6D/9T/21W-10V	6 in Recess	Yes	9.5 / 13.5 / 21	770 / 1050 / 1500	3000K, 3500K, 4000K selectable	81 / 78 / 71	90	120-277	0-10V	max. 20%	0.9

Dimension:

Copyright © 2008-2024. All Rights Reserved
12257 Florence Ave. | Santa Fe Springs. CA 90670
Toll Free: (866) 933-7736 | Tel.: (562) 529-2938 | Fax: (562) 529-2978
Email: info@espentech.com | www.espentech.com

THE POWER TO CREATE BETTER LIGHT ™

MODEL	PRODUCT DIMENSIONS	MAX LUMINOUS SIZE	CUT-OUT SIZE
VEKR4D/9T/14W-10V VEKR4D/8T/10W-10V	Dia. 5.71" (145mm) x H 3.70" (94mm)	4.33" (110mm)	4.52" (115mm) - 5.31" (135mm)
VEKR6D/9T/21W-10V VEKR6D/8T/13W-10V	Dia. 8.27" (210mm) x H 4.25" (108mm)	5.71" (145mm)	6.02" (153mm) - 7.48" (190mm)
VEKR8D/9T/27W-10V VEKR8D/8T/17W-10V	Dia. 10.24" (260mm) x H 4.57" (116mm)	7.28" (185mm)	7.68" (195mm) - 9.45" (240mm)
VEKR9.5D/9T/40W-10V VEKR9.5D/8T/27W-10V	Dia. 11.22" (285mm) x H 5.04" (128mm)	8.54" (217mm)	8.86" (225mm) - 10.43" (265mm)

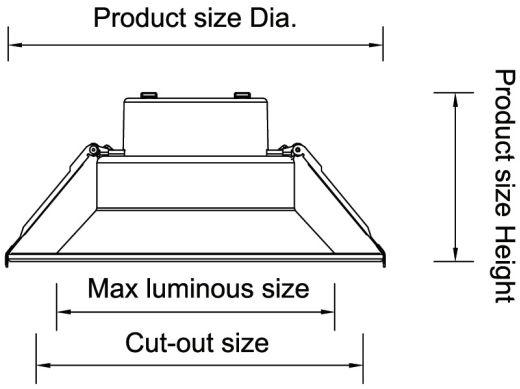

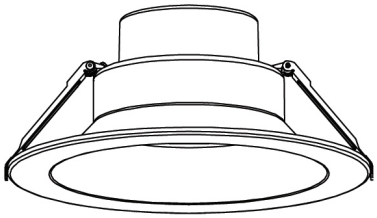

Specification data is based on tests performed in a controlled environment and represents relative performance. Actual performance can vary depending on operating conditions. Application and performance data subject to change without notice. All specifications are nominal unless noted otherwise.

Copyright © 2008-2024. All Rights Reserved
12257 Florence Ave. | Santa Fe Springs. CA 90670
Toll Free: (866) 933-7736 | Tel.: (562) 529-2938 | Fax: (562) 529-2978
Email: info@espentech.com | www.espentech.com